COSMICAR®/PENTAX®

1/4 Format Manual Iris Vari-Focal

QS2V2212

CS-MOUNT
Unit:mm

QS2V2812(C40207)

CS-MOUNT
Unit:mm

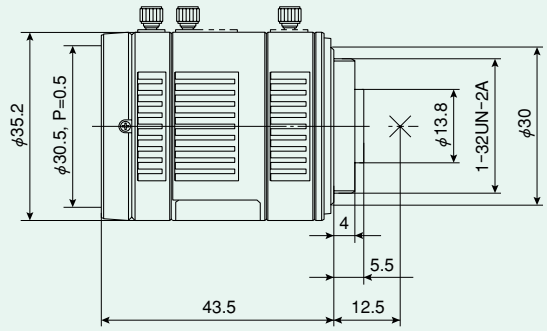

1/3 Format Manual Iris Vari-Focal

TS2V214(C70213)

CS-MOUNT
Unit:mm

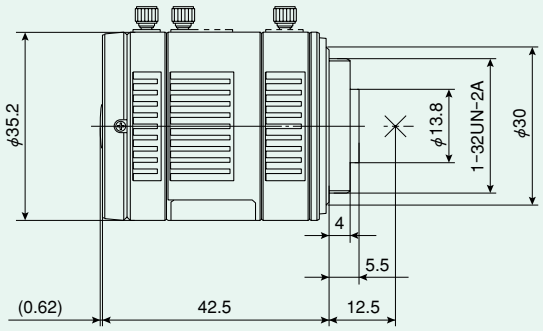

TS2V314A(C70308)

CS-MOUNT
Unit:mm

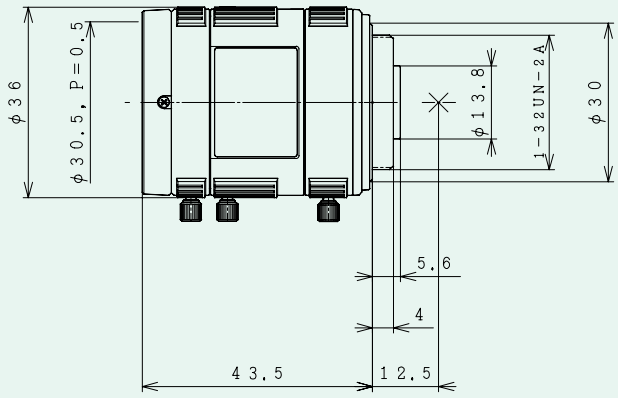

■Specifications		QS2V2212	QS2V2812	TS2V214	TS2V314A
Focal Length		2.2～4.5mm	2.8～5.8mm	2.8～6mm	3.5～8mm
Max. Aperture Ratio		1:1.2	1:1.2	1:1.4	1:1.4
Iris Range		F1.2～Close	F1.2～Close	F1.4～Close	F1.4～Close
Operation Method	Iris	Manual	Manual	Manual	Manual
	Focus	Manual	Manual	Manual	Manual
	Zoom	Manual	Manual	Manual	Manual
1/4 Format Angle of View	Horizontal		76.21～36.41	72.46～35.15	58.74～26.55
	Vertical		55.84～27.22	54.24～26.40	43.57～19.90
1/3 Format Angle of View	Horizontal	———	———	96.94～46.74	79.83～35.44
	Vertical	———	———	72.46～35.15	58.74～26.55
1/2 Format Angle of View	Horizontal	———	———	———	———
	Vertical	———	———	———	———
Min. Object Distance			0.3m	0.3m	0.35m
Back Focal Length			Min. 7.50mm	Min. 7.54mm	Min. 7.79mm
Flange Back Length		12.5mm	12.5mm	12.5mm	12.5mm
Filter Screw Size			φ30.5mm P=0.5mm	———	φ30.5mm P=0.5mm
Temperature Range		−20℃～+50℃	−20℃～+50℃	−20℃～+50℃	−20℃～+50℃
Dimensions			φ36×43.5mm	φ36×43.2mm	φ36×43.5mm
Weight			45g	47g	43g
Remarks					