RS-485 System Controller
with 3D-Joystick

WV-CU360CJ

This equipment complies with the EMC Directive 89/336/EEC

PS•Data

The WV-CU360CJ System Controller enables the following key functions.

- Camera selection
- Alarm (LED/Suspend/Recall/Reset)
- Setup menu

Remote control of the Panasonic dome camera series via PS•Data Link mode through WJ-MP204C.

- Camera functions: Super Dynamic Ⅲ /Electronic Shutter/Electronic Sensitivity/Automatic Gain Control/Site Alarm
- Lens function: Iris/Focus/Auto Focus/Zoom
- Housing: Defroster/Wiper/Auxiliary 1 & 2
- Pan/Tilt: slow Pan/slow Tilt/Auto Pan/Auto Sort/Auto Sequence/Random Pan/Preset/Home, and finely turned panning/tilting

Remote control of the System650 and System150 via RS-485 communication Data.

DIMENSIONS

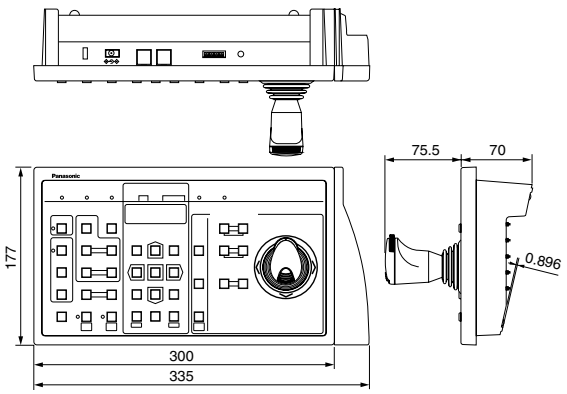

Unit : mm

SPECIFICATIONS

Power Source	9V DC, 400mA Use only AC Adapter model CU35AD270G (or CU35AD271B)
Power Consumption	10W
Data Output/Input Port	6-conductor modular jack (RS-485, Full Duplex)
Switching Functions (WJ-MP204C)	Camera selection
Controller Number	1-8 (Rotary Switch)
Unit Address Selection	1-99
Monitor Number Selection	1-99
Camera Number Selection	1-199
Lens Functions	Iris: Open/Close/Preset (only with DC control lens) Focus: Near/Far/Auto Focus Zoom: Wide/Tele
Housing	Defroster: On/Off Wiper: On/Off Auxiliary 1: On/Off Auxiliary 2: On/Off
Pan/Tilt	Manual Pan: Right/Left Manual Tilt: Up/Down Auto Pan, Auto Sort, Auto Sequence, Random Pan, Preset Position, Home Position, Camera Patrol
Other Camera Controls	Camera Setup, Camera Function
System Operation	Camera selection, Alarm (Display/Suspend/Recall/Reset), Setup
Ambient Operating Temperature	-10°C - +50°C
Ambient Operating Humidity	Less than 90%
Dimensions	335 (W) x 145.5 (H) x 177 (D) mm
Weight	1.4 kg

AC Adapter....1pc 6-conductor Modular Cable Assembly....1pc

1CH Camera Controller

WV-CU161C

This equipment complies with the EMC Directive 89/336/EEC

- Preset control : 64 positions function, focus, zoom ratio, rotation mode, etc.
- Lens control : zoom ratio, focus, iris
- Pan/tilt control : manual pan, manual tilt, auto-pan
- Receiver control : wiper, defroster, AUX 1-2
- Camera control : home position, camera setting, patrol function
- Preset control interlocked to alarm signal
- Built-in alarm recover input/reset output
- Built-in RS-485 terminal
- Built-in joystick positioner
- Preset data : up/download function, maximum 8 cameras

```
WV-CU161C SETUP MENU

  ALARM SETUP
  SYSTEM SETUP
  PRESET DATA LOAD
  COMMUNICATION
```

Example of Setup Menu

DIMENSIONS

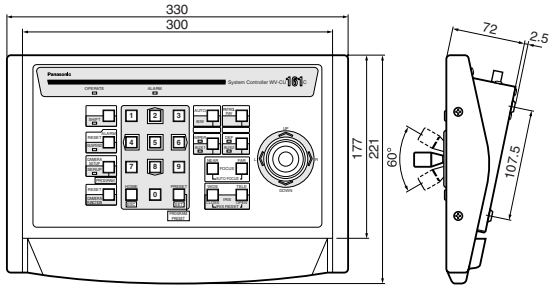

Unit : mm

SPECIFICATIONS

Power Source		220 - 240 V AC 50 Hz
Power Consumption		7 W
Camera Input	Composite Video Signal	1.0 V[p-p] / 75Ω
Alarm Input		Max. 4 input
Video Output	Composite Video Signal	1.0 V[p-p] / 75Ω, multiplexed video and control data
Alarm Output	Open Collector Output	16 V DC, 100 mA max.
RS-485 Terminal		RS-485, full (4 line) or half (2 line) switchable
Lens Control	Zoom	Tele / Wide (Electronic zoom: Depending on the camera model)
	Focus	Near / Far / Auto Focus
	Iris	Open / Close / Reset
Pan / Tilt Control	Manual	Selectable at variable speed control
	Auto Pan	On / Off
Housing Control	Wiper	On / Off
	Defroster	On / Off
	AUX 1.2	On / Off
Camera Control (Depending on the camera model)	Position Select	Selectable 1 to 64 (max.)
	Home Position	Possible
	Camera Setup	Possible
	Patrol Learn Function	Possible
	B/W, Colour Mode	Possible
Memory		Camera Preset Data Upload / Download (Max. 8 cameras)
Alarm	Alarm Buzzer	On / Off
	Alarm Display	On / Off
	Auto Reset / Manual Reset	Possible
	Alarm Suspend	Possible
Ambient Operating Temperature		–10°C - +50°C
Ambient Operating Humidity		Less than 90%
Dimensions (W x H x D)		330 x 74.5 x 221 mm
Weight		2.4 kg