BOSCH
Invented for life

# Varifocal Lenses

- **High-quality optics**
- **1/3-inch and 1/2-inch formats**
- **Reliable, robust construction**
- **Focal length options**
- **Compact design**
- **Manual and DC-iris versions**
- **Manual focus and zoom control**

For optimizing angular fields right on site, varifocal lenses are the most versatile and practical solution available. These lenses allow for setting virtually any angle of field, which maximizes surveillance effects. Installers do not need to carry several different focal length lenses – and installation is more efficient because they can find the right angles of field without moving the camera set-up. If the field-of-view requirements change after installation, modification is simple by just altering the lens' focal length settings.

## Functions

This series includes both manual and DC-iris varifocal lenses. They are compact, rugged, and available in 1/3-inch and 1/2- inch image formats. The series is organized by sensitivity, optical resolution, and range to match the wide range of Dinion camera applications.

These varifocal lenses come with a standard C or CS mount for use with a variety of cameras. The DC-iris control connection is a four-pin standard plug that fits directly into the camera's iris output. And the lenses deliver impressive optical quality due to their high standards for resolution, contrast reproduction, and coating.

The mechanical construction is designed to withstand both frequent DC-iris control operations and the environmental stress of security installations. For flexible, high-quality, reliable lenses that match a camera's performance, this varifocal series is the ideal solution.

## Installation/Configuration Notes

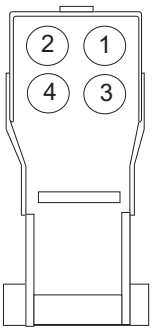


*4-pin DC-iris connector (front view)*

| | |
|---|---|
| Pin 1: | Damping coil - |
| Pin 2: | Damping coil + |
| Pin 3: | Driving coil + (open) |
| Pin 4: | Driving coil - |

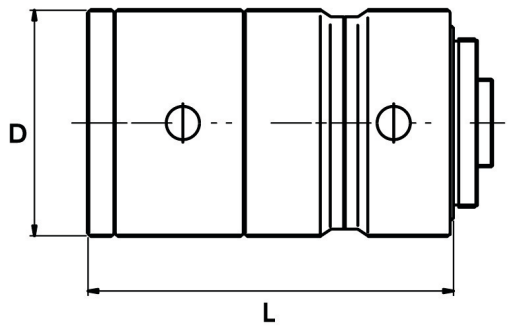


| Lens type | L mm (in) | D mm (in) |
|---|---|---|
| LTC 3361/32 | 42 (1.65) | 36 (1.42) |
| LTC 3361/41 | 59 (2.32) | 44 (1.73) |
| LTC 3361/50 | 55(2.17) | 34 (1.34) |
| LTC 3361/60 | 45.3 (1.78) | 33 (1.3) |
| LTC 3371/21 | 59.2 (2.33) | 42 (1.65) |
| LTC 3371/50 | 61.5 (2.42) | 44 (1.73) |

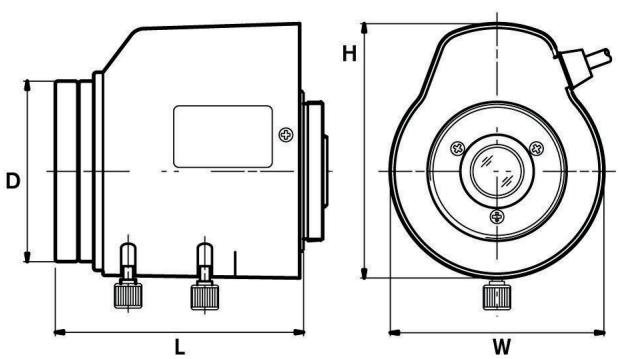


| Lens Type | L | D | H | W |
|---|---|---|---|---|
| | mm (in) | mm (in) | mm (in) | mm (in) |
| LTC 3274/41 | 77 (3.03) | 42 (1.65) | 56.8 (2.24) | 46.5 (1.83) |
| LTC 3364/21 | 44 (1.73) | 35.2 (1.39) | 45.7 (1.8) | 40.4 (1.59) |
| LTC 3664/30 | 44.4 (1.75) | 35.2 (1.39) | 44.7 (1.76) | 38.3 (1.51) |
| LTC 3364/50 | 55 (2.17) | 34 (1.34) | 46 (1.81) | 40 (1.57) |
| LTC 3364/60 | 45.3 (1.78) | 33 (1.3) | 46.5 (1.83) | 39 (1.54) |
| LTC 3374/50 | 61.5 (2.42) | 44 (1.73) | 52.2 (2.06) | 44.4 (1.75) |

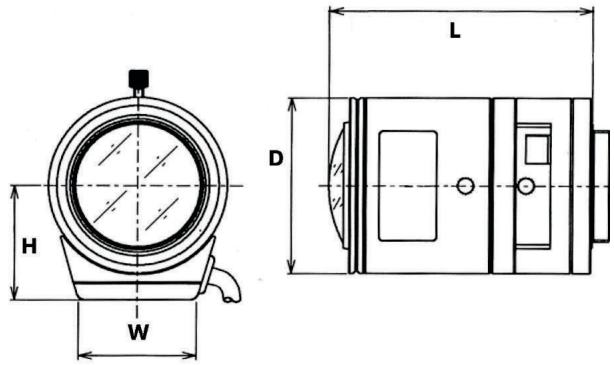


| Lens Type | L | D | H | W |
|---|---|---|---|---|
| | mm (in) | mm (in) | mm (in) | mm (in) |
| LTC 3364/32 | 42 (1.65) | 33 (1.3) | 25.5 (1.0) | 22.7 (0.89) |
| LTC 3364/41 | 59 (2.32) | 41 (1.61) | 26 (1.02) | 26 (1.02) |
| LTC 3374/21 | 59.2 (2.33) | 40 (1.57) | 32 (1.26) | 24.6 (0.97) |
| LTC 3664/40 | 59 (2.32) | 44 (1.73) | 26.2 (1.03) | 26.4 (1.04) |
| LTC 3674/20 | 55.2 (2.17) | 38 (1.5) | 27.2 (1.07) | 31 (1.22) |
| LTC 3764/20 | 53.9 (2.12) | 40 (1.57) | 31 (1.22) | 24.6 (0.97) |
| LTC 3774/30 | 62 (2.44) | 38.6 (1.52) | 31.1 (1.22) | 31.8 (1.25) |

## Technical Specifications

**Electrical/mechanical**

*See comparison table at the end of this datasheet.*

**Environmental**

| | |
|---|---|
| Operating Temperature | -10°C to+50°C (+14°F to +122°F) |
| Storage Temperature | -40°C to +70°C (-40°F to + 158°F) |
| Operating Humidity | Up to 93% non-condensing |
| Certification | CE (DC-iris models) |

## Ordering Information

| | |
|---|---|
| **LTC 3361/50 Varifocal Lens**<br>1/3-inch, 2.8 – 10 mm, manual-iris, CS-mount F1.4-close | **LTC3361/50** |
| **LTC 3364/50 Varifocal Lens**<br>1/3-inch, 2.8 – 10 mm, DC-iris, CS-mount, F1.4-360, 4 pin | **LTC3364/50** |
| **LTC 3361/60 Varifocal Lens**<br>1/3-inch, 3.5 – 8 mm, manual-iris, CS-mount F1.4-close | **LTC3361/60** |
| **LTC 3364/60 Varifocal Lens**<br>1/3-inch, 3.5 – 8 mm, DC-iris, CS-mount F1.4-360, 4-pin | **LTC3364/60** |
| **LTC 3361/32 Varifocal Lens**<br>1/3-inch, 3.0 – 8 mm, manual-iris, CS-mount F1.0-close | **LTC3361/32** |

## Ordering Information

| | |
|---|---|
| **LTC 3364/32 Varifocal Lens**<br>1/3-inch, 3.0 to 8 mm, DC-iris, CS-mount F1.0-360, 4-pin | **LTC 3364/32** |
| **LTC 3361/41 Varifocal Lens**<br>1/3-inch, 2.8 to 12 mm, manual-iris, CS-mount F1.4-close | **LTC 3361/41** |
| **LTC 3364/41 Varifocal Lens**<br>1/3-inch, 2.8 to 12 mm, DC-iris, CS-mount F1.4-360, 4-pin | **LTC 3364/41** |
| **LTC 3371/50 Varifocal Lens**<br>1/3-inch, 5 – 50 mm, manual iris, CS-mount F1.7-close | **LTC3371/50** |
| **LTC 3374/50 Varifocal Lens**<br>1/3-inch, 5 – 50 mm, DC-iris, CS-mount F1.7-360, 4-pin | **LTC3374/50** |
| **LTC 3371/21 Varifocal Lens**<br>1/3-inch, 5 to 50 mm, manual iris, CS-mount F1.4-close | **LTC 3371/21** |
| **LTC 3374/21 Varifocal Lens**<br>1/3-inch, 5 to 50 mm, DC-iris, CS-mount F1.4-360, 4-pin | **LTC 3374/21** |
| **LTC 3364/21 Varifocal Lens IR corrected**<br>1/3-inch, 2.8 – 6 mm, DC-iris, CS-mount F1.4-200, 4-pin | **LTC3364/21** |
| **LTC 3664/30 Varifocal Lens IR corrected**<br>1/3-inch, 3.0 – 8 mm, DC-iris, CS-mount F1.0-360, 4-pin | **LTC3664/30** |
| **LTC 3664/40 Varifocal Lens IR corrected**<br>1/3-inch, 2.8 – 11 mm, DC-iris, CS-mount F1.4-360, 4-pin | **LTC3664/40** |
| **LTC 3674/20 Varifocal Lens IR corrected**<br>1/3-inch, 7.5 – 50 mm, DC-iris, CS-mount F1.3-360, 4-pin | **LTC 3674/20** |
| **LTC 3764/20 Varifocal Lens IR corrected**<br>1/2-inch, 4 – 12 mm, DC-iris, C-mount F1.2-360, 4-pin | **LTC 3764/20** |
| **LTC 3774/30 Varifocal Lens IR corrected**<br>1/2-inch, 10 – 40 mm, DC-iris, C-mount F1.4-360, 4-pin | **LTC 3774/30** |
| **LTC 3274/41 Varifocal Lens**<br>1/2-inch, 7.5 – 75 mm, DC-iris, C-mount, F1.7-360, 4-pin | **LTC3274/41** |
| **Accessories** | |
| **S1374 Adapter**<br>converts C mount lens to CS mount camera | **S1374** |

## Varifocal Lenses 1/3 and 1/2 inch

| | | | | |
|---|---|---|---|---|
| | **LTC3361/50** | **LTC3364/50** | **LTC3361/60** | **LTC3364/60** |
| **Image format** | 1/3 inch | 1/3 inch | 1/3 inch | 1/3 inch |
| **Focal length** | 2.8 – 10 mm | 2.8 – 10 mm | 3.5 – 8 mm | 3.5 – 8 mm |
| **Iris range** | F1.4 to close | F1.4 - 360 | F1.4 to close | F1.4 - 360 |
| **Min object distance** | 0.3 m (1 ft) | 0.3 m (1 ft) | 0.3 m (1 ft) | 0.3 m (1 ft) |
| **Back focus distance** | 7.8 mm (0.3 in) | 7.8 mm (0.3 in) | 8.4 mm (0.33 in) | 8.4 mm (0.33 in) |
| **Weight** | 57 g (0.13 lb) | 69 g (0.15 lb) | 41 g (0.1 lb) | 53 g (0.12 lb) |
| **Lens mount** | CS | CS | CS | CS |
| **Angle view Wide (1/3 in.)** | 83 x 62.4 | 83 x 62.4 | 77.6 x 58.2 | 77.6 x 58.2 |
| **Angle view Tele (1/3 in)** | 28.8 x 21.6 | 28.8 x 21.6 | 33.6 x 25 | 33.6 x 52 |
| **Angle view Wide (1/2 in.)** | - | - | - | - |
| **Angle view Tele (1/2 in.)** | - | - | - | - |
| **Iris control** | manual | 4-pin, DC control | manual | 4-pin, DC control |
| **Focus ctrl** | manual | manual | manual | manual |
| **Zoom ctrl** | manual | manual | manual | manual |

## Varifocal Lenses 1/3 and 1/2 inch

| | | | | |
|---|---|---|---|---|
| | **LTC3361/32** | **LTC 3364/32** | **LTC 3361/41** | **LTC 3364/41** |
| **Image format** | 1/3 inch | 1/3 inch | 1/3 inch | 1/3 inch |
| **Focal length** | 3 – 8 mm | 3 – 8 mm | 2.8 – 12 mm | 2.8 – 12 mm |
| **Iris range** | F1.0 to close | F1.0 - 360 | F1.4 to close | F1.4 - 360 |
| **Min object distance** | 0.2 m (0.66 ft) | 0.2 m (0.7 ft) to inf. | 0.3 m (1 ft) | 0.3 m (1 ft) to inf. |
| **Back focus distance** | 8.4 mm (0.33 in) | 8.4 mm (0.33 in) | 8.6 mm (0.34 in) | 8.6 mm (0.34 in) |
| **Weight** | 39 g (0.09 lb) | 50 g (0.11 lb) | 67 g (0.15 lb) | 71 g (0.16 lb) |
| **Lens mount** | CS | CS | CS | CS |
| **Angle view Wide (1/3 in.)** | 91 x 66.9 | 91 x 66.6 | 97.4 x 72.5 | 97.4 x 72.5 |
| **Angle view Tele (1/3 in)** | 36 x 26.9 | 35.9 x 26.9 | 24.1 x 18.1 | 24.1 x 18.1 |
| **Angle view Wide (1/2 in.)** | - | - | - | - |
| **Angle view Tele (1/2 in.)** | - | - | - | - |
| **Iris control** | manual | 4-pin, DC control | manual | 4-pin, DC control |
| **Focus ctrl** | manual | manual | manual | manual |
| **Zoom ctrl** | manual | manual | manual | manual |

## Varifocal Lenses 1/3 and 1/2 inch

| | | | | |
|---|---|---|---|---|
| | **LTC3371/50** | **LTC3374/50** | **LTC 3371/21** | **LTC 3374/21** |
| **Image format** | 1/3 inch | 1/3 inch | 1/3 inch | 1/3 inch |
| **Focal length** | 5 – 50 mm | 5 – 50 mm | 5 – 50 mm | 5 – 50 mm |
| **Iris range** | F1.7 to close | F1.7 - 360 | F1.4 to close | F1.4 - 360 |
| **Min object distance** | 1 m (3.3 ft) | 1 m (3.3 ft) | 1 m (3.3 ft) | 1 m (3.3 ft) |
| **Back focus distance** | 7.6 mm (0.3 in) | 7.6 mm (0.3 in) | 10.05 mm (0.4 in) | 10.05 mm (0.4 in) |
| **Weight** | 149 g (0.33 lb) | 160 g (0.35 lb) | 75 g (0.17 lb) | 84 g (0.19 lb) |
| **Lens mount** | CS | CS | CS | CS |
| **Angle view Wide (1/3 in.)** | 50 x 37.8 | 50 x 37.8 | 53.4 x 40.1 | 53.4 x 40.1 |
| **Angle view Tele (1/3 in)** | 5.5 x 4.1 | 5.5 x 4.1 | 5.3 x 4.1 | 5.3 x 4.1 |
| **Angle view Wide (1/2 in.)** | - | - | - | - |
| **Angle view Tele (1/2 in.)** | - | - | - | - |
| **Iris control** | manual | 4-pin, DC control | manual | 4-pin, DC control |
| **Focus ctrl** | manual | manual | manual | manual |
| **Zoom ctrl** | manual | manual | manual | manual |

## Varifocal Lenses 1/3 and 1/2 inch

| | | | | |
|---|---|---|---|---|
| | **LTC3364/21** | **LTC3664/30** | **LTC3664/40** | **LTC 3674/20** |
| **Image format** | 1/3 inch (IR) | 1/3 inch (IR) | 1/3 inch (IR) | 1/3 inch (IR) |
| **Focal length** | 2.8 – 6 mm | 3 – 8 mm | 2.8 – 12 mm | 7.5 – 50 mm |
| **Iris range** | F1.4 - 200 | F1.0 - 360 | F1.4 - 360 | F1.3 - 360 |
| **Min object distance** | 0.3 m (1.0 ft) | 0.3 m (1 ft) to inf. | 0.3 m (1 ft) to inf. | 0.4 m (1.3 ft) |
| **Back focus distance** | 7.6 mm (0.3 in) | 7.5 mm (0.3 in) | 8.6 mm (0.34 in) | 8.1 mm (0.32 in) |
| **Weight** | 59 g (0.13 lb) | 60 g (0.13 lb) | 79 g (0.17 lb) | 68 g (0.15 lb) |
| **Lens mount** | CS | CS | CS | CS |
| **Angle view Wide (1/3 in.)** | 96.9 x 72.5 | 93.2 x 69 | 97.4 x 72.4 | 36.6 x 27.4 |
| **Angle view Tele (1/3 in)** | 46.7 x 35.1 | 35.2 x 26.4 | 26.2 x 19.7 | 5.6 x 4.3 |
| **Angle view Wide (1/2 in.)** | - | - | - | - |
| **Angle view Tele (1/2 in.)** | - | - | - | - |
| **Iris control** | 4-pin, DC control | 4-pin, DC control | 4-pin, DC control | 4-pin, DC control |
| **Focus ctrl** | manual | manual | manual | manual |
| **Zoom ctrl** | manual | manual | manual | manual |

## Varifocal Lenses 1/3 and 1/2 inch

| | | | |
|---|---|---|---|
| | **LTC 3764/20** | **LTC 3774/30** | **LTC3274/41** |
| **Image format** | 1/2 inch (IR) | 1/2 inch (IR) | 1/2 inch |
| **Focal length** | 4 – 12 mm | 10 – 40 mm | 7.5 – 75 mm |
| **Iris range** | F1.2 - 360 | F1.4 - 360 | F1.7 – 360 |
| **Min object distance** | 0.3 m (1.0 ft) | 0.5 m (1.6 ft) | 0.3 m (1 ft) |
| **Back focus distance** | 9 mm (0.35 in) | 12.4 mm (0.49 in) | 8.5 mm (0.34 in) |
| **Weight** | 68 g (0.15 lb) | 87 g (0.19 lb) | 220 g (0.48 lb) |
| **Lens mount** | C | C | C |
| **Angle view Wide (1/3 in.)** | 68.9 x 51.3 | 27.5 x 20.4 | 35.5 x 26.6 |
| **Angle view Tele (1/3 in)** | 23.4 x 17.5 | 7.0 x 5.2 | 3.7 x 2.8 |
| **Angle view Wide (1/2 in.)** | 93.6 x 68.9 | 37.5 x 27.5 | 46.2 x 35.5 |
| **Angle view Tele (1/2 in.)** | 31.2 x 23.4 | 9.2 x 7.0 | 4.9 x 3.7 |
| **Iris control** | 4-pin, DC control | 4-pin, DC control | 4-pin, DC control |
| **Focus ctrl** | manual | manual | manual |
| **Zoom ctrl** | manual | manual | manual |

**Americas:**
Bosch Security Systems, Inc.
130 Perinton Parkway
Fairport, New York, 14450, USA
Phone: +1 800 289 0096
Fax: +1 585 223 9180
security.sales@us.bosch.com
www.boschsecurity.us

**Europe, Middle East, Africa:**
Bosch Security Systems B.V.
P.O. Box 80002
5600 JB Eindhoven, The Netherlands
Phone: + 31 40 2577 284
Fax: +31 40 2577 330
emea.securitysystems@bosch.com
www.boschsecurity.com

**Asia-Pacific:**
Robert Bosch (SEA) Pte Ltd, Security Systems
11 Bishan Street 21
Singapore 573943
Phone: +65 6258 5511
Fax: +65 6571 2698
apr.securitysystems@bosch.com
www.boschsecurity.com

**Represented by**

© Bosch Security Systems Inc. 10 | Data subject to change without notice
T1485545227 | Cur: en-US, V12, 7 Jul 2010