AVENIR

Seikou Optical Ltd.
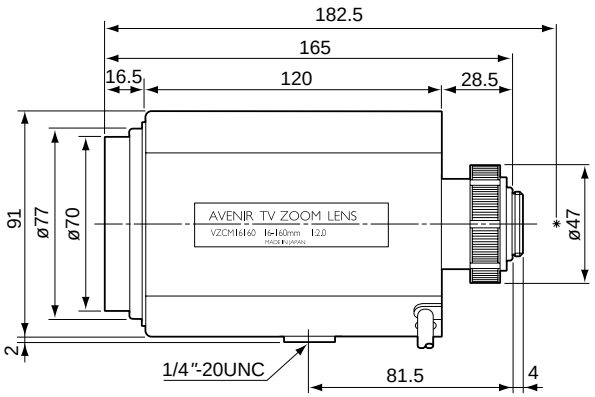
Model No.			VZCM16160
Image Format Cover			1″ ~ 1/3″
Focal Length			16 ~ 160mm
Maximum Aperture Ratio			1:2.0-2.4
Zoom Ratio			10X
Iris	Control Method		Motorized
	Iris Range		F2.0(2.4) ~ Close
	Speed		Approx. 4 sec
	Input Voltage & Current		DC12V Max.50mA
	Sensitivity Adjustment		---
Focus	Control Method		Motorized
	Speed		Approx. 6 sec
	Input Voltage & Current		DC12V Max.50mA
Zoom	Control Method		Motorized
	Speed		Approx. 6 sec
	Input Voltage & Current		DC12V Max.50mA
Angle Field of View (DXHXV)	1/3 inch	Wide	20.8˚X16.7˚X12.5˚
		Tele	2.2˚X1.8˚X1.3˚
	1/2 inch	Wide	27.7˚X22.1˚X16.7˚
		Tele	3.0˚X2.4˚X1.8˚
	2/3 inch	Wide	37.1˚X30.0˚X22.8˚
		Tele	4.1˚X3.3˚X2.4˚
	1 inch	Wide	53.4˚X43.4˚X32.9˚
		Tele	5.7˚X4.6˚X3.5˚
Minimum Object Distance			1.5m
Back Focal Length			34.94mm
Effective Diameter		Front	ø63.0mm
		Rear	ø18.4mm
Filter Screw Size			M67.0 P=0.75
Mount / Flange Back			C/17.526
Mechanical Dimension (WXHXL)			118.0mmX91.0mmX165.0mm
Total Weight			1320.0g
Application Temperature Range			0˚C ~ +50˚C (+32˚F ~ +122˚F)
Remarks			---