AVENIR

Seikou Optical Ltd.
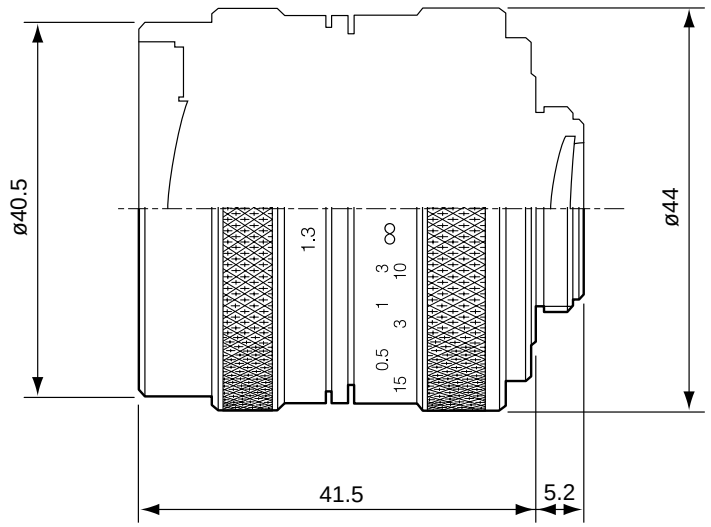
Model No.			**MTCH0813-1**
Image Format Cover			2/3″ ~ 1/3″
Focal Length			8.0mm
Maximum Aperture Ratio			1:1.3
Iris	Control Method		Manual
	Iris Range		F1.3 ~ Close
Focus	Control Method		Manual
Angle Field of View (DXHXV)		1/3 inch	41.1˚X33.4˚X25.4˚
		1/2 inch	53.1˚X43.6˚X33.4˚
		2/3 inch	70.4˚X59.0˚X45.5˚
Minimum Object Distance			0.2m
Back Focal Length			13.18mm
Effective Diameter		Front	ø25.0mm
		Rear	ø14.2mm
Filter Screw Size			M37.5 P=0.5
Mount / Flange Back			C/17.526mm
Mechanical Dimension (DXL)			ø44.0mmX41.5mm
Total Weight			136.0g
Application Temperature Range			-10˚C ~ +50˚C (+14˚F ~ +122˚F)
Remarks			---