Arecont Vision
425 East Colorado Street, 7th Floor
Glendale, CA 91205
www.arecontvision.com
avsales@arecontvision.com
Toll Free: 877.CAMERA.8

Arecont Vision
megapixel technology...
beyond imagination

Lens 4.0

Specification Data Sheet

4.0mm F2.0 CS - Mount 1.3 Megapixel CCTV Lens

4.0 MM (CS - MOUNT)

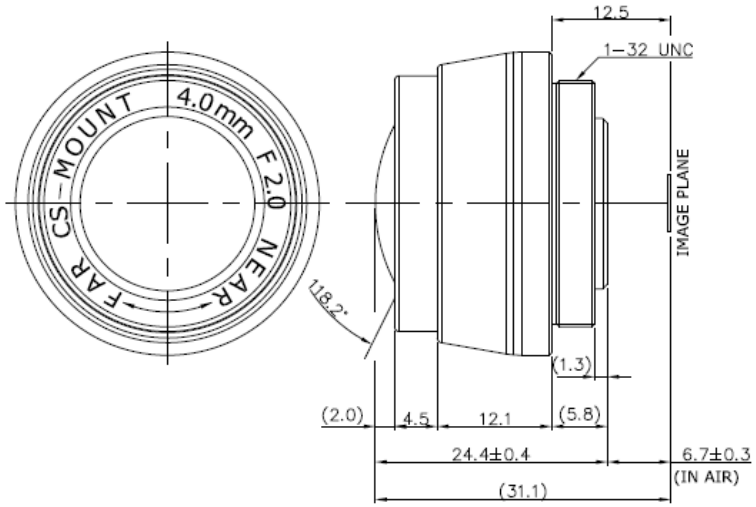

1. SENSING AREA : 1/2"
2. FOCAL LENGTH : 4.0MM ± 5%
3. BACK FOCAL LENGTH : 7.4MM ± 5% (IN AIR)
4. MAXIMUM RELATIVE APERTURE : 2.0± 5%
5. IRIS : FIXED
6. LENS CONSTRUCTION : 6COMPONENTS 6ELEMENTS
7. ANGULAR FIELD OF VIEW : 118.2°(DIAGONAL)
   95.0°(HORIZONTAL)
   71.6°(VERTICAL)
8. WEIGHT : 34.0gr
9. COATING : Multi-coating (Al2O3)+(ZrO2+TIO2)+(MgF2)
10. GRADE : 1.3 MEGA PIXEL LENS

(IT IS CHANGEABLE ON EXTERNAL DIMENSION BY
BY CUSTOMER'S REQUIREMENT.)

NO.	DESCRIPTION	METERIAL	SIZE	Q'TY	REMARK
DRAWN	TOLERANCES				
CHECKED	ANGLE 1/2°	TITLE			
APPROVED	X. ± 0.2 .X ± 0.1 .XX ± 0.05	f=4.0mm, Fno 2.0, 1/2" 1.3 Megapixel Lens (CS-MOUNT)			
SCALE N/S		DRAW NO. 260406	SHEET NO.		

Arecont Vision
425 East Colorado Street, 7th Floor
Glendale, CA 91205
www.arecontvision.com
avsales@arecontvision.com
Toll Free: 877.CAMERA.8

Arecont Vision
megapixel technology...
beyond imagination

Lens 4.0 IR

Specification Data Sheet

4.0mm F2.0 (650nm IR cut Filter)CS - Mount 1.3 Megapixel CCTV Lens

4.0 MM (CS - MOUNT)

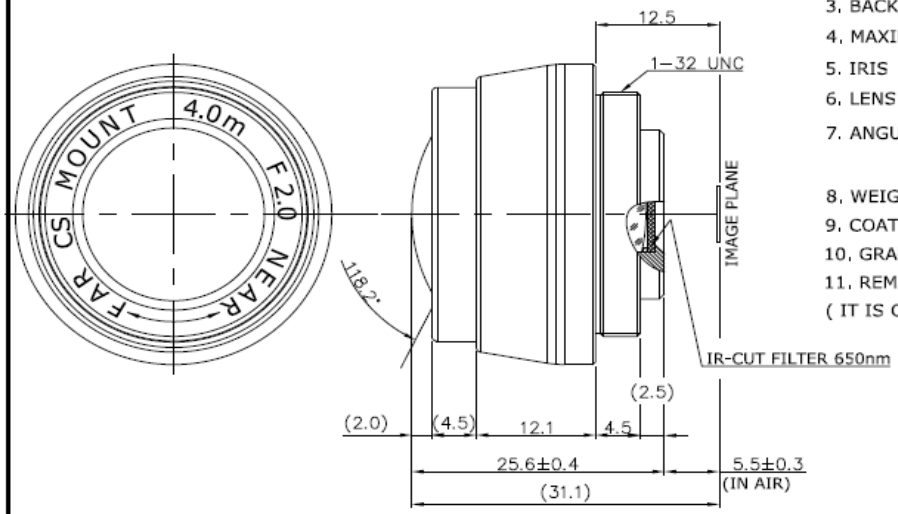

1. SENSING AREA : 1/2"
2. FOCAL LENGTH : 4.0MM ± 5%
3. BACK FOCAL LENGTH : 7.4MM ± 5% (IN AIR)
4. MAXIMUM RELATIVE APERTURE : 2.0± 5%
5. IRIS : FIXED
6. LENS CONSTRUCTION : 6COMPONENTS 6ELEMENTS
7. ANGULAR FIELD OF VIEW : 118.2°(DIAGONAL)
   95.0°(HORIZONTAL)
   71.6°(VERTICAL)
8. WEIGHT : 33.7gr
9. COATING : Multi-coating (Al_2O_3)+(ZrO_2+TiO_2)+(MgF_2)
10. GRADE : 1.3 MEGA PIXEL LENS
11. REMARKS : BUILT IN IR-CUT 650nm FILTER
(IT IS CHANGEABLE ON EXTERNAL DIMENSION BY BY CUSTOMER'S REQUIREMENT.)

NO.	DESCRIPTION	METERIAL	SIZE	Q'TY	REMARK
DRAWN	TOLERANCES				
CHECKED	ANGLE 1/2°	TITLE f=4.0mm, Fno 2.0, 1/2" 1.3 Megapixel Lens (CS-MOUNT) [BUILT IN FILTER]			
APPROVED	X. ±0.2				
SCALE N/S	.X ±0.1 .XX ±0.05	DRAW NO. 270222	SHEET NO.		