VKCD-1324C/IR

Article-No.: 200173

1/3" Dome, Fixed, Day&Night,
Pixim, clear, 2,8-10mm, 570TVL
IR LED, 12VDC/24VAC

Mainfeatures

Digital Pixel System (Pixim Seawolf DSP)
Built-in lens F1.2/2,8-10mm with DC iris control
Removable IR cut filter
Adjustable low speed Shutter (DSS)
IR illumination by 30 integral 850nm LEDs
Weatherproof camera / Protection rating: IP68/IK10
Wide dynamic range: 102dB, 120dB max.
Sensitivity of 0.4Lux (F1.2 / colour)
Digital noise reduction (DNR)
Motion detection with 4 zones
Surface or flush mounting / Clear bubble
Supply voltage: 12VDC/24VAC

Specifications

System	day&night
Video standard	PAL
Sensor size	1/3"
Imager	DPS (Pixim)
Active picture elements	768(H) x 540(V) pixels
Horizontal resolution	570 TVL
Synchronization	internal
Signal-to-noise ratio	52db (AGC OFF)
Gamma correction	manually adjustable
Sensitivity (at 50% video signal)	0,4 Lux
Sensitivity (at 50% video signal)	(colour), 0.06Lux (B&W) at F1.2 (measured)
Automatic gain control (AGC)	yes
Exposure modes	low speed shutter
Automatic electronic shutter (ESC)	yes
Manual electronic shutter (MES)	no
Low speed shutter	yes

Specifications (continued)

Low speed shutter	2 ~ 64 Fps., ON /OFF switchable
Digital Noise Reduction (DNR)	yes
Digital Noise Reduction (DNR)	3D NR with adjustable gain
Backlight compensation	no
Wide Dynamic Range (WDR)	yes
White balance	ATW, ATW Desat, manual, ATW extended
Blemish compensation	no
Aperture Correction (APC)	horizontal and vertical
IR cut filter	switchable
Day/Night switching	auto, day, night,
Privacy zones masking	6 zones masking
Menu languages	English, German, French, Spanish
OSD function control	white balance, iris: DC/manual, exposure, DNR, WDR, PAL/NTSC, day&night, sharpness, freeze, digital zoom, H/V flip (mirror picture), Rotation
Text display	camera ID
Activity detection	yes
Motion detector	4 zones, ON/OFF switchable
Mirror function	yes
Digital zoom	12x
Analysis functions	activity detection
Lens type	varifocal
Focal length	2,8 mm - 10 mm
Horizontal angle of view	81,2° - 27°
MOD (Minimum object distance)	0,1 m
Aperture range (F)	F1.2
Iris control	DC
External adjustments	zoom & focus, menu
Video outputs	composite (CVBS)
Video outputs	BNC
Alarm inputs	no
Alarm outputs	no
e-PTZ support	no
Rotation range	330°
Horizontal turning range	330°(+/-165°)
Tilt range	65° (+25° ~ +90° from horizontal level)
Illumination	infrared
Illumination	30x LEDs 850nm, integrated light sensor for On/Off switching of the illumination
	ja
External connections	video (BNC), RS-485, voltage input
Serial interfaces	RS-485
Serial interfaces protocols	Pelco D
Housing	outdoor, indoor
Housing	aluminium
Housing material	aluminium
Bubble	Polycarbonate (Lexan)
Colour (bubble)	clear

Specifications (continued)

Colour (housing)	Pantone 7541
Heater	no
Blower	no
Mounting	flush mount, ceiling mount, wall mount
Supply voltage	12VDC, 24VAC
Supply voltage	(+/-10%)
Power consumption	8W max.
Temperature range (operation)	-20°C ~ +50°C
Protection rating	IP68
Vandalism resistant	yes
Dimensions (HxWxD)	119x140
Weight	1kg
Certificates	CE, IK10
Special features	electronic focus help function enables an exact focus adjustment for colour- and black & white mode without the support of a separate ND- or Grey- filter.

Optional Accessories

Image	Artikel-Nr. / Typ	Description
	VT-PS12DC-9	Plug-in Power Supply Unit 100-240VAC 12VDC (1.0Amp), Regulated, w. open Ends

Technical Drawing

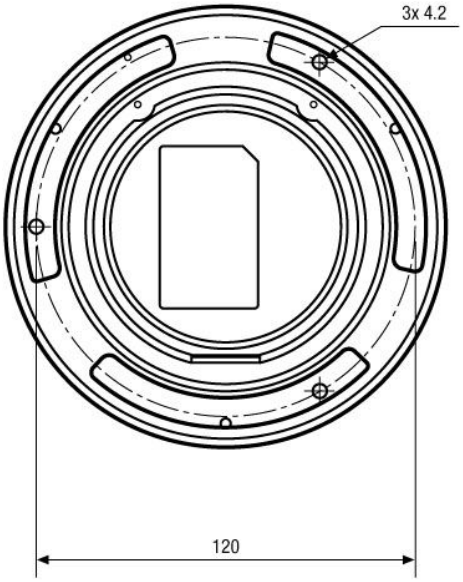

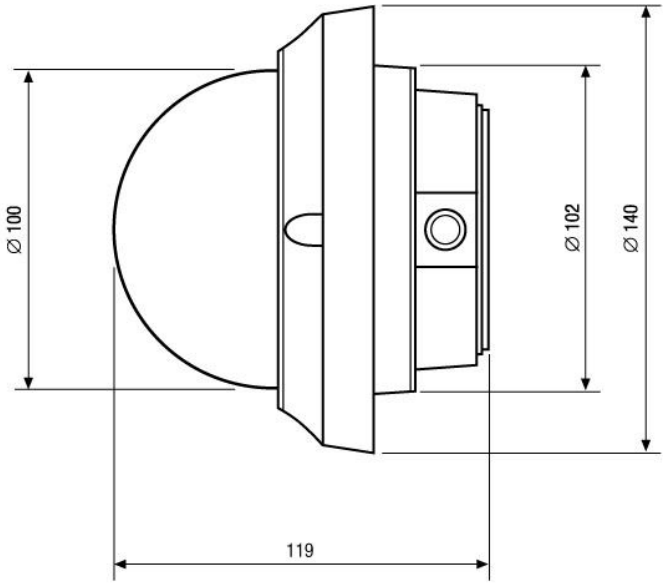

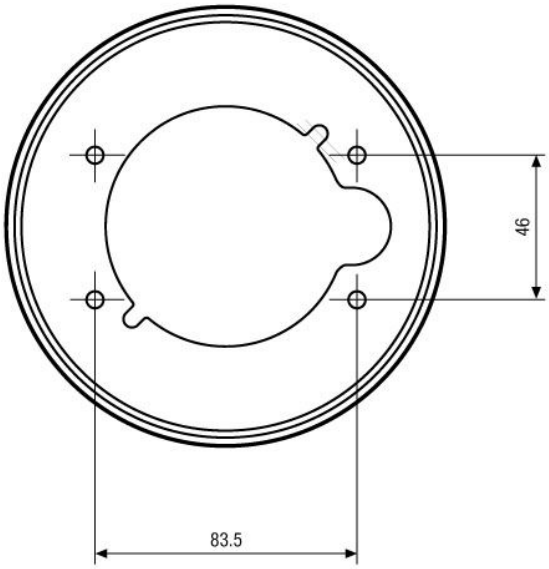

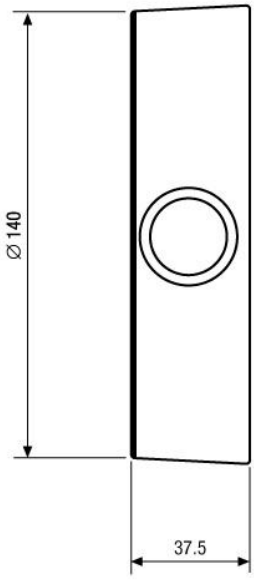

Maße/Dimensions: mm

Your partner for eneo products: